SYM	DWG.NO	CHANGE NO	DATE	REV'D BY
/	1C00008YP-A	1CE0002	'14. 7.30	K.Nakada
/	1C00008YP-B	1CE0030	'18. 3.19	K.Nakada
△1	1C00008YP-C	1BE0005	'19.10.28	K.Nakada

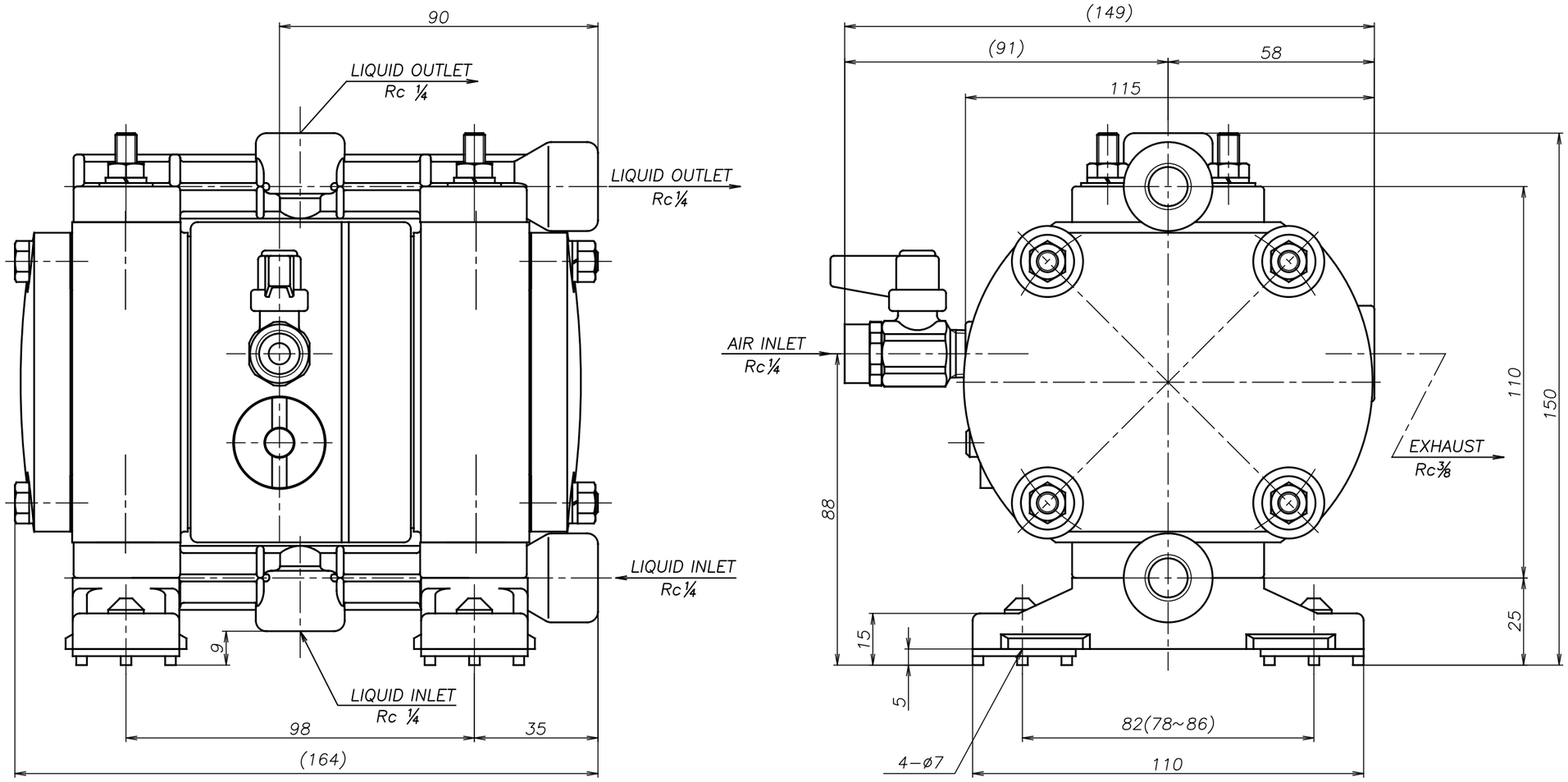

APP'D BY	'20. 4.23	S.Murata	THE DWG. OF: ダイアフラム ポンプ アッセンブリ DIAPHRAGM PUMP ASSEMBLY △050 PT
CHECKED BY	'20. 4.23	K.Nakano	
DRAWN BY	'20. 4.23	K.Nakada	
YTS Co., Ltd JAPAN			THIRD ANG. PROJ. / SCALE Free / DWG.NO. 1C00008YP-C