SYM	DWG.NO	CHANGE NO	DATE	REV'D BY
	1B00007YN-A	1BE0002	'14.04.08	K.Nakada
1	1B00007YN-B	1BE0005	'19.10.28	K.Nakada
2	1B00007YN-C	1BE0006 誤記訂正	'20. 6.23	K.Nakada

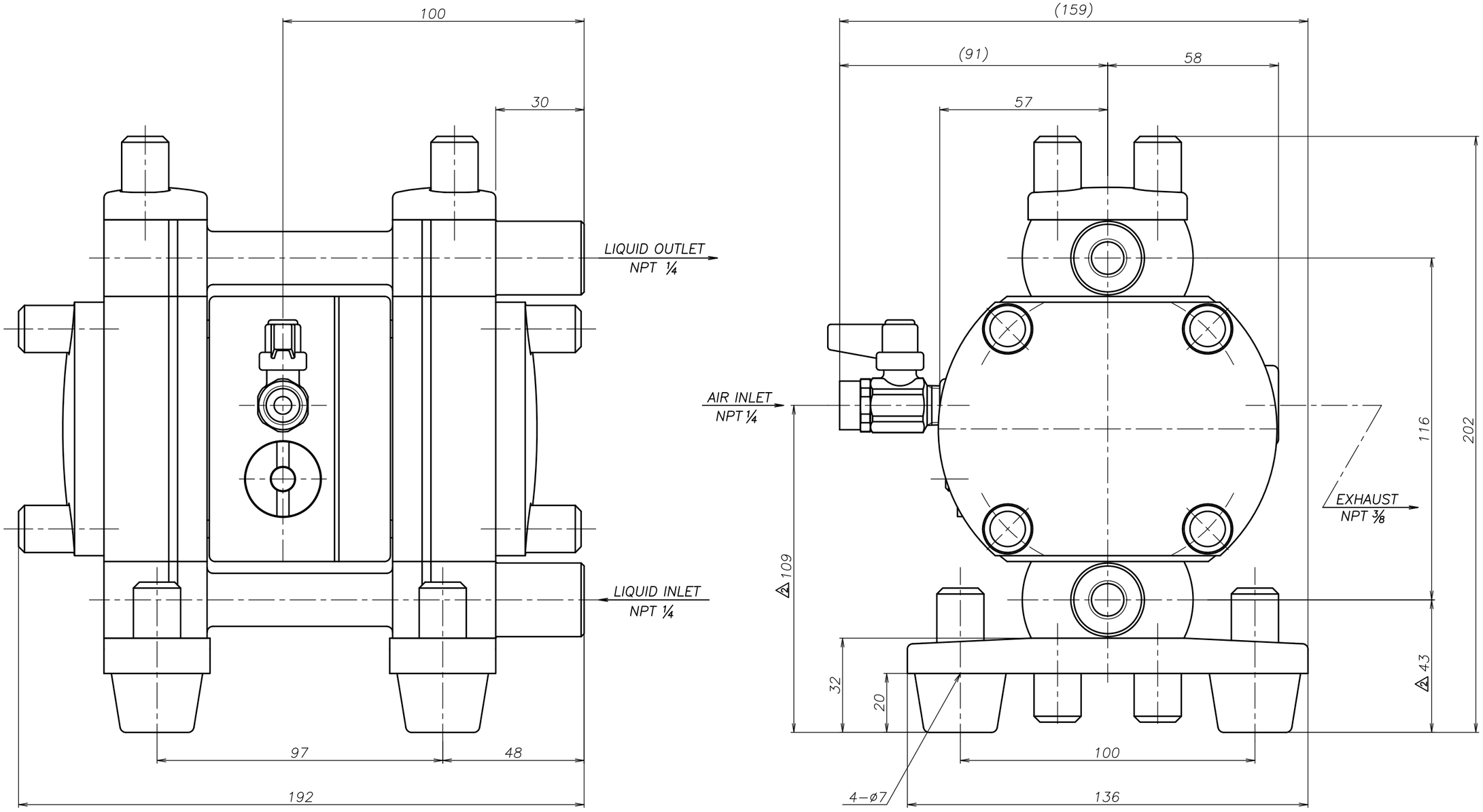

APP'D BY	'24. 3.29	S.Murata	THE DWG. OF: DIAPHRAGM PUMP ASSEMBLY (ダイアフラム ポンプ アッセンブリ)
CHECKED BY	'24. 3.29	Y.Takahashi	
DRAWN BY	'24. 3.29	J.Tomatsuri	1 030 HTN
YTS Co., Ltd JAPAN			THIRD ANG. PROJ. / SCALE Free / DWG.NO. 1B00007YN-C