SYM	DWG.NO	CHANGE NO	DATE	REV'D BY
	1C00031YN-A	1CE0012	'15. 9. 8	S.Murata
1	1C00031YN-B	1CE0014	'16. 5.11	K.Nakada
2	1C00031YN-C	1BE0005	'19.10.28	K.Nakada

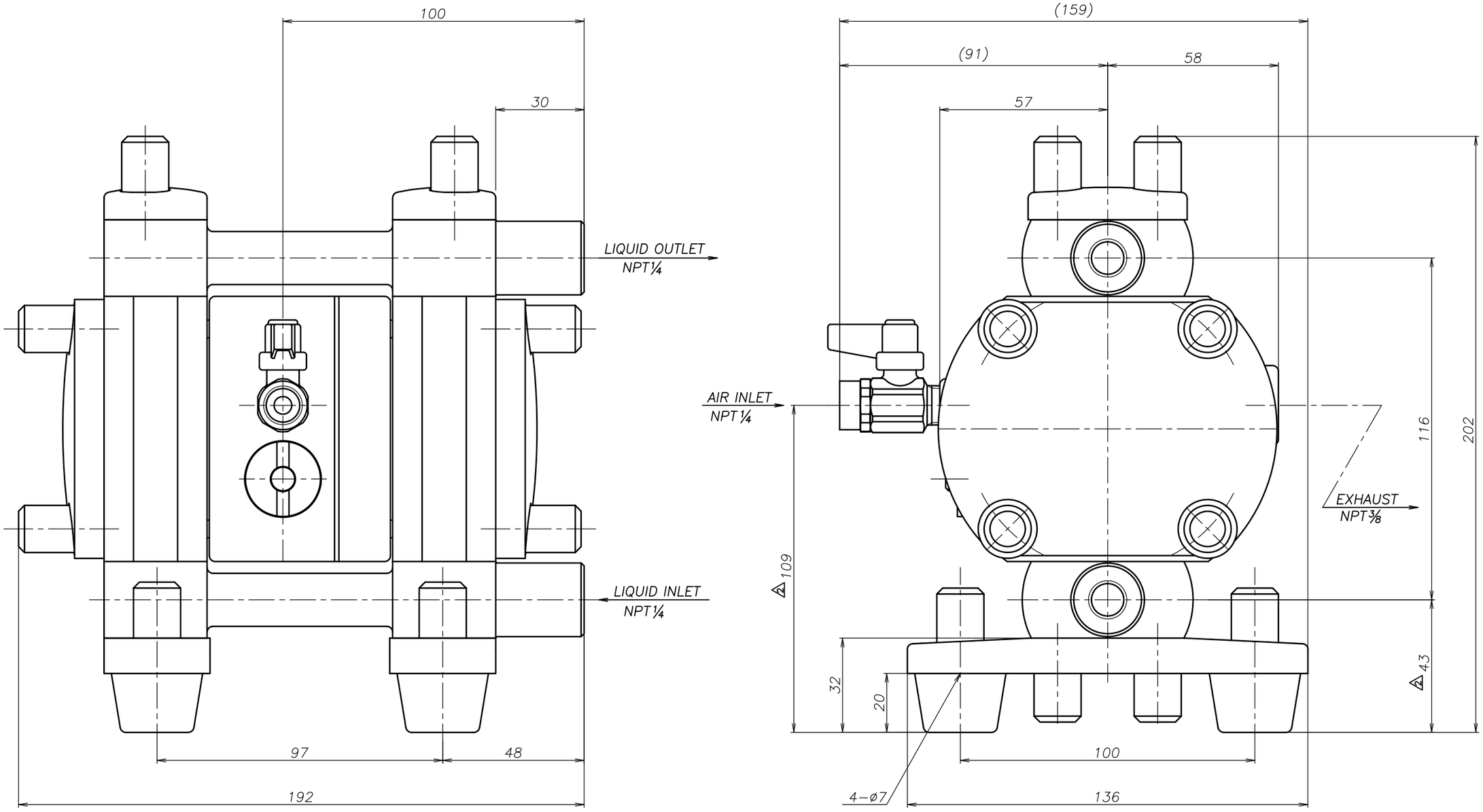

APP'D BY	'24. 3.29	S.Murata
CHECKED BY	'24. 3.29	Y.Takahashi
DRAWN BY	'24. 3.29	J.Tomatsuri

YTS Co., Ltd JAPAN

THE DWG. OF:
ダイアフラム ポンプ アッセンブリ
DIAPHRAGM PUMP ASSEMBLY
1 050 HTN

THIRD ANG. PROJ.
SCALE Free

DWG.NO.
1C00031YN-C