SYM	DWG.NO	CHANGE NO	DATE	REV'D BY
	1C00026YP-A	1CE0014	'15. 4. 8	K.Nakada
	1C00026YP-B	1CE0030	'18. 3.19	K.Nakada

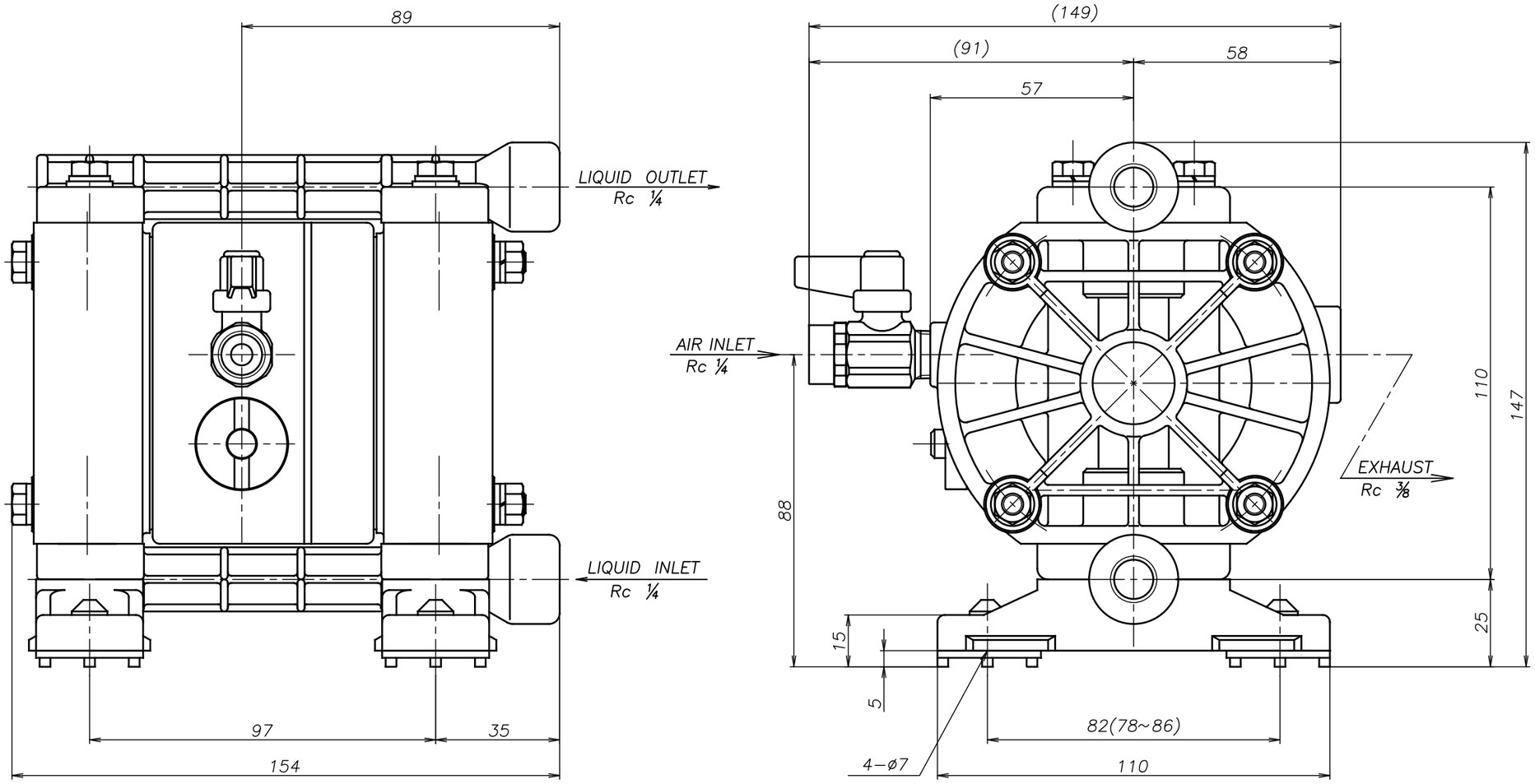

APP'D BY	'18. 3.19	S.Murata	THE DWG. OF: ダイアフラム ポンプ アッセンブリ DIAPHRAGM PUMP ASSEMBLY
CHECKED BY	'18. 3.19	K.Nakano	TC-X050VT
DRAWN BY	'18. 3.19	K.Nakada	THIRD ANG. PROJ. / DWG.NO.
YTS Co., Ltd JAPAN			SCALE Free / 1C00026YP-B